1887235
O-Augustine Console
Parts List

A.	Top Assembly	1 pc
B.	Legs	4 pcs
C.	Stretcher	1 pc
D.	Allen Head Bolts	8 pcs
E.	Lock Washers	8 pcs
F.	Flat Washers	8 pcs
G.	Phillips Head Screws	4 pcs
H.	Phillips Head Screwdriver	1 pc
I.	Allen Head Wrench	1 pc
J.	Optional Allen Head Screwdriver Bit	1 pc

* Please make sure that you have all the parts indicated above before you begin assembly of this item.
* This item should be assembled on a soft surface to prevent scratching the finish during assembly.
* This item may require periodic tightening.

Hardware Illustrations

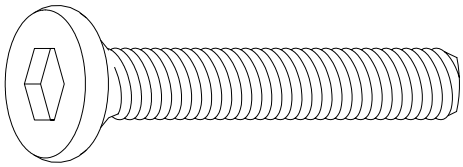

D. Allen Head Bolt

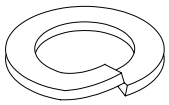

E. Lock Washer

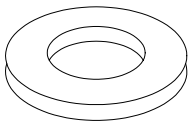

F. Flat Washer

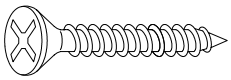

G. Phillips Head Screw

1887235
O-Augustine Console

Assembly Instructions

1. **Attach Legs (B)** Put the Top Assembly (A) upside down on a soft surface. Align the pre-drilled holes in the Legs (B) with the pre-threaded holes in the corner blocks of Top Assembly (A). Secure, but do not tighten with Allen Head Bolts (D), Lock Washers (E) and Flat Washers (F) using Allen Head Tool (I or J). See illustration.
2. **Attach Stretcher (C)** Align the pre-drilled holes in the brackets of Stretcher (C) with the pre-drilled holes in the Legs (B). Make sure the brackets face up. Secure with Phillips Head Screws (G) using Phillips Head Screwdriver (H). See illustration .
3. Tighten all bolts at this time.

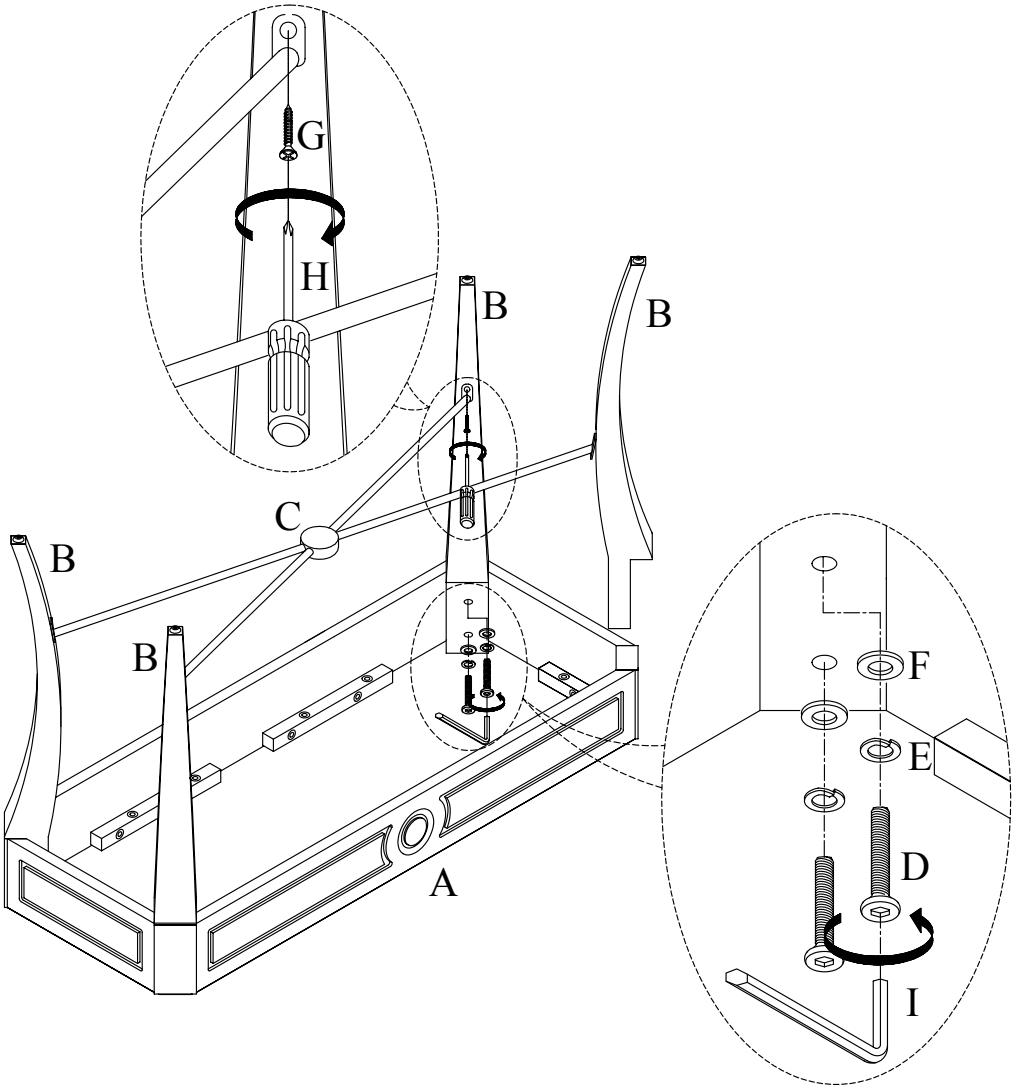

Illustration

R1-03-22-05